SRFvh 4011

Pharmacy/Laboratory refrigerator with convection cooling

Perfection



LIEBHERR

Freestanding

SRFvh 4011

Pharmacy/Laboratory refrigerator with convection cooling
Perfection

Ultra Efficient | LED | Door Lock



Gross/net capacity	420/297 l
Ext. dimensions in mm (w/d/h)	597/654/1955
Int. dimensions in mm (w/d/h)	460/423/1660
Energy consumption in 365 days	389 kWh
Ambient temperature range	+10 °C to +35 °C
Heat output	463 kJ/h
Refrigerant	R 600a
Frequency / voltage	50 Hz / 220-240 V~
Cooling system	forced-air
Defrosting	automatic
Temperature range	+3 °C to +16 °C
Gradient / max. fluctuation	3.0 °C / 2.4 °C
Housing material/colour	steel / white
Door material	glass
Liner Material	commercial grade moulded polystyrol
Type of Control	2.4" touch & swipe colour display
Alarm in case of malfunction	visual and audible
Power failure alarm	immediately upon power failure for at least 12 hrs
volt-free alarm contact	yes
Interface	WiFi/LAN
Data logger	integrated, USB interface
Interior light	vertical LED light strip recessed in left wall with separate switch
Adjustable Shelving	9
Shelf material	wire shelves plastic-coated
Usable shelf area in mm (w / d)	460 / 423
Shelf loading	45 kg
Maximum total load	225 kg
Handle	antimicrobial handle with opening mechanism
Access ports	1 x Ø 10 mm
Type of lock	mechanical
Door hinges	right, reversible on site
Gross/net weight	87/80 kg

LIEBHERR

Features

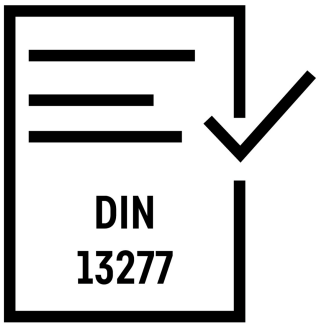

DIN 13277 compliant

Laboratory and pharmacy refrigerators from Liebherr meet all the necessary features and performance criteria to fully comply with DIN 13277. DIN 13277 defines the requirements and test specifications for refrigerators and freezers used in laboratories and for storing medicinal products.

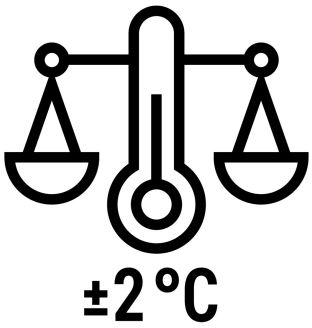

±2 °C temperature stability

Temperature fluctuations must be minimal to ensure that the quality of sensitive substances is preserved. Liebherr appliances have an impressive maximum deviation of just ±2 °C from the set temperature. This not only maintains the storage climate, but also the value of your stored goods.



Easy to clean interior

The plastic inside container is made of polystyrene: a fully recyclable, robust, and odourless plastic. Manufactured seamlessly from one piece, it has no hidden dirt traps and the large corner radii can be cleaned quickly and easily. The perfect combination of sustainability and hygiene.



Ultraefficient

Energy-efficient refrigerators and freezers help with ever increasing electricity prices. Liebherr fully utilises the savings potential of every component – from the compressor to the seal, to the lighting and electronics. The ultra-efficient appliances in the Perfection series for example demonstrates how this has a positive effect on your overall operating costs.



+2 °C SafetyDevice

If the temperature in the appliance drops below +2 °C due to a malfunction, the +2 °C SafetyDevice function takes control, which keeps the temperature stable and activates an alarm. Sensitive substances are protected from freezing and you are notified immediately.

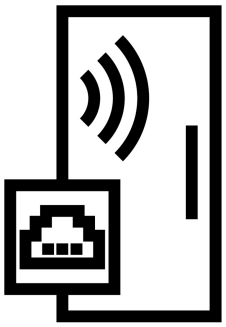

Integrated WiFi/LAN interface

Connect and go: The appliance can be easily networked with external systems, such as SmartMonitoring from Liebherr via the integrated WiFi and LAN interface. Thanks to the digital monitoring solution, the storage temperature is controlled and documented via the interface in an effortless, safe, and convenient way.

The overview represents an excerpt of the most important appliance features. All other features of the appliance and further information are available at home.liebherr.com.

LIEBHERR

Technical drawing

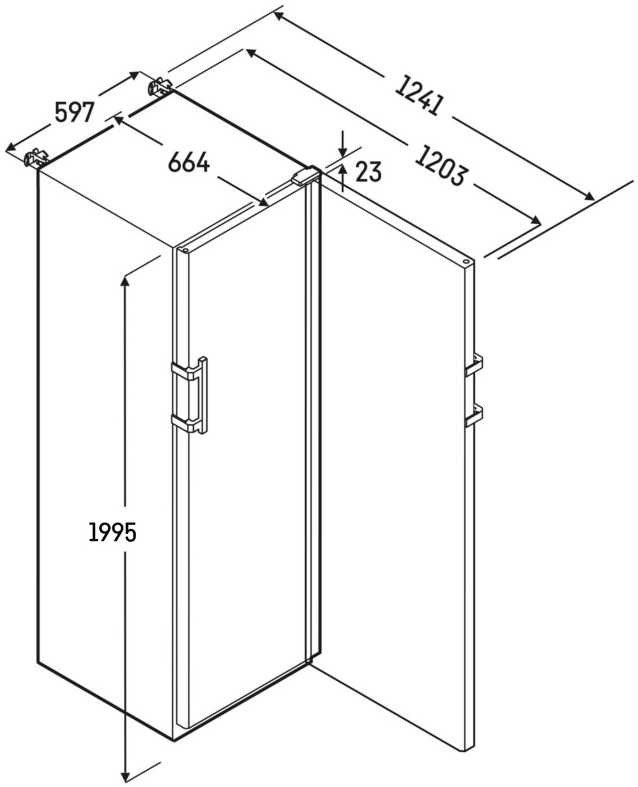

Products and their details are staged for advertising purposes. Whilst every effort is made to ensure all specifications and information in this flyer are accurate, Liebherr reserves the right to make changes without notification. Where actual appliance measurements, specifications, and ratings are crucial, we recommend that the actual appliance installation instructions that accompany each appliance be checked. Liebherr will not be liable for any damage. (28.11.2023)